SPECIFICATION APPLIED

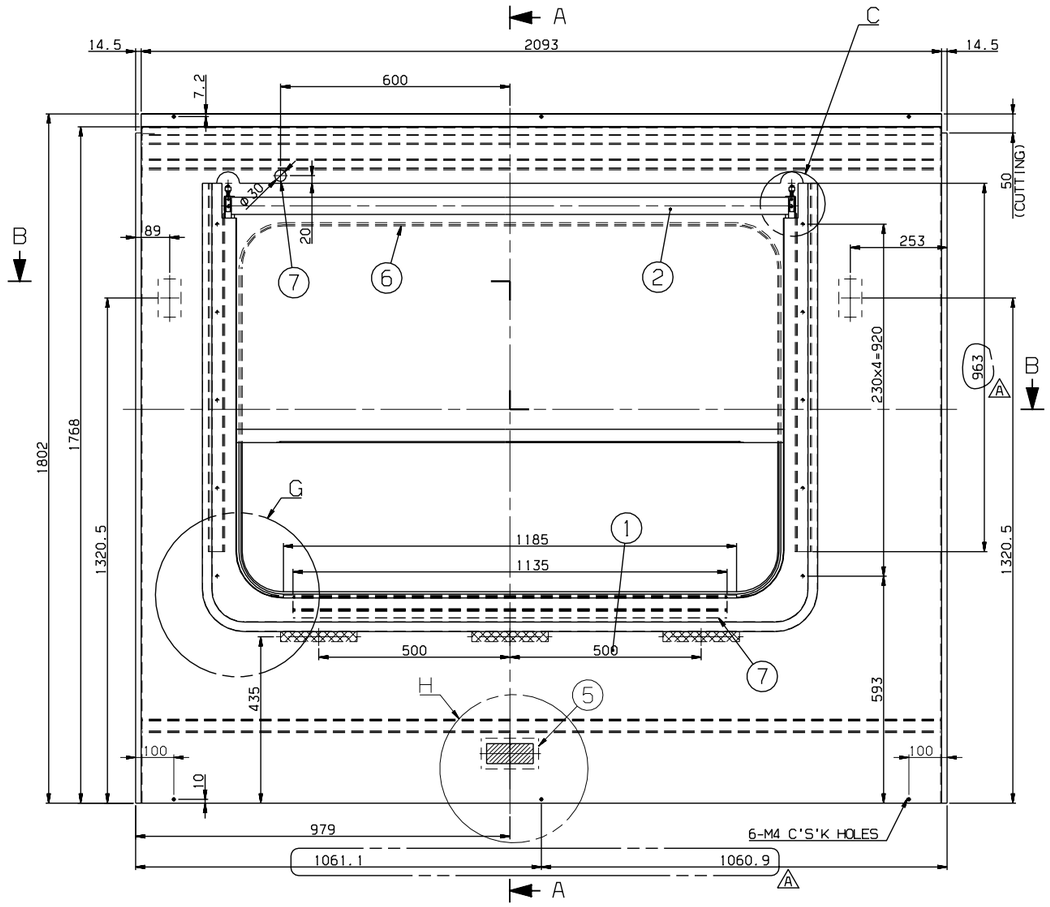

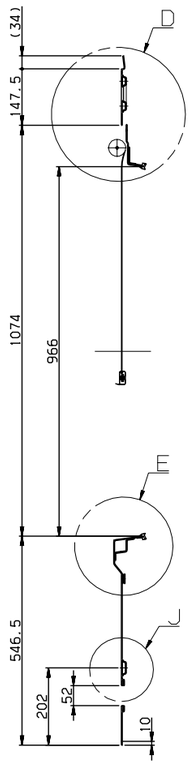

SECTION A-A

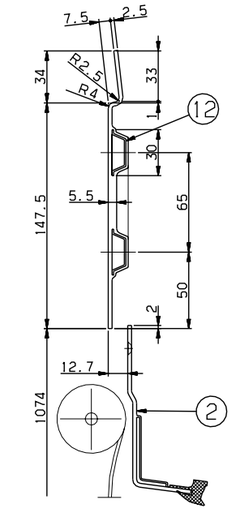

DETAIL D
SCALE=1/2

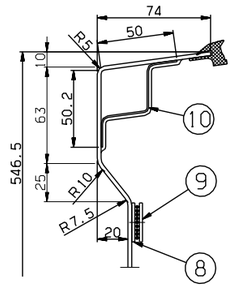

DETAIL E
SCALE=1/2

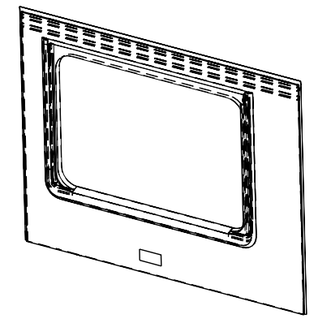

ISO VIEW

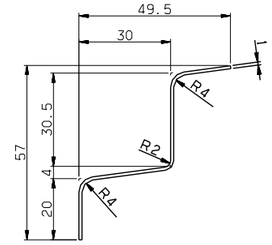

DETAIL #10
SCALE=1/1

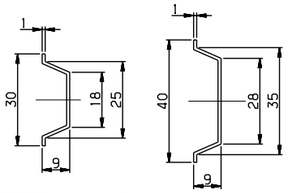

DETAIL #12
SCALE=1/1

DETAIL #11
SCALE=1/1

NOTE

1. AN INTERIOR PANEL'S COLOR(RAL 7047) AND SURFACE SHALL BE MANUFACTURED AFTER SAMPLE'S APPROVAL BY CUSTOMER
2. PART 6 SHALL BE CUT ADEQUATELY AND USED
3. PART 7 IS TO PROTECT.
4. PART 2 SHALL BE WELL OPERATED UNDER CONDITION OF ASSEMBLY
5. PART 8 SHALL BE FIXED ON THE PART 1, AND PART 9 SHALL BE DELIVERED SEPERATETLY
6. THE INTERFACE BETWEEN PART 1 AND PART 2 SHALL BE STRONGLY SEALED
7. PART 4 SHOULD BE APPLIED WITH PART 14.

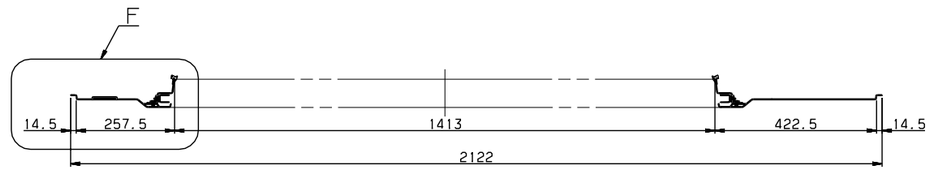

SECTION B-B

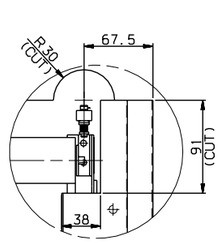

DETAIL C
SCALE=1/3

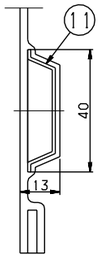

DETAIL J
SCALE=1/1

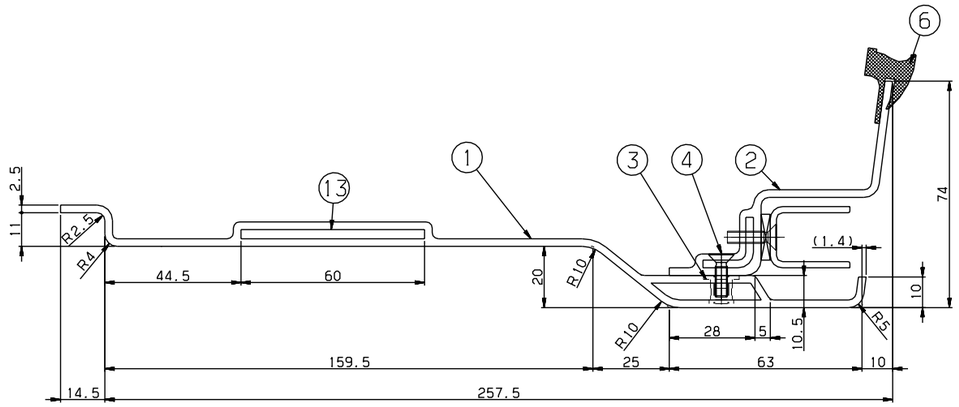

DETAIL F
SCALE=1/1

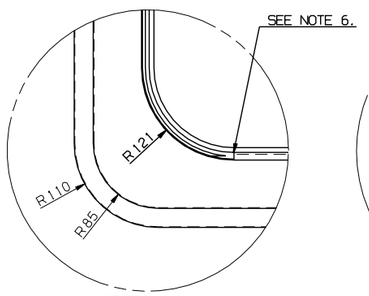

DETAIL G
SCALE=1/4

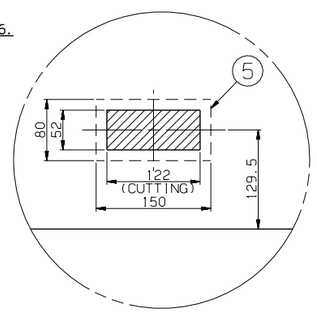

DETAIL H
SCALE=1/4

NO.	PART NO.	DESCRIPTION	MATERIAL	Q'TY	V.T	REMARKS
14	CP910004-406	ADHESIVE	ASSY	1		LOCTITE 242
13	RFP51122EJ0-013	SEAT,TAP	SUS304	2		PL T3x100x60
12	RFP51122EJ0-012	STIFFENER	A1050P	2		T1
11	RFP51122EJ0-011	STIFFENER	A1050P	1		T1
10	RFP51122EJ0-010	STIFFENER	SUS304	1		T1,L=1135
9	RFP51122EJ0-009	DUAL_LOCK,FASTENER	ASSY	3		3M,SJ-3550 L=200(DUAL TAPE)
8	RFP51122EJ0-008	DUAL_LOCK,FASTENER	ASSY	3		3M,SJ-3551 L=200(DUAL TAPE)
7	RFP90013AN0	RUBBER BUSH	ASSY	1		F2.2332
6	RFP51122EJ0-006	RUBBER,SECTION	ASSY	1		RFP51011AN0,L=4600
5	RFP51122EJ0-005	SEAT,TAP	SUS304	1		PL T3x150x80
4	RS60607-098S	SCREW,F.H	SUS304	10		M4X14
3	RFP51122EJ0-003	NUTSERT	SUS304	10		M4
2	RFP51009AN0	PANEL,BLIND WINDOW	ASSY	1		
1	RFP51122EJ0-001	PANEL	FRP	1		T2.5

기술 MARK	일자 DATE	내용 DETAIL OF REVISION(E.C ZONE)	설변번호 E.C NO.	설계 DGN	검도 CHK	승인 APP
Ax4	2014.12.18	ADDED PART NO.#14 & DIMENSION	RSD1402-U071	H.U.LEE	K.B.PARK	J.Y.LEE

기술 MARK	일자 DATE	내용 DETAIL OF REVISION(E.C ZONE)	설변번호 E.C NO.	설계 DGN	검도 CHK	승인 APP

품명 NAME	WINDOW,MASK,TYPE Q
재질 MAT'L	ASSY
중량 G.W	
일반공차 MC / MD / CT	B / B / B
척도 SCALE	1/8
용지 SIZE	A1
도면번호 DRG. NO	RFP51122EJ0
MS	
Ver.	00
Rev.	-A
SHEET	1 of 1

승인 APP: JeongYul Lee 2014.10.14
검도 CHK: KeongBong Park 2014.10.14
설계 DGN: HeonUk Lee 2014.10.14
제도 DRG: HeeSook Jeong 2014.10.14

관련 REF. NO.

RSD1402
RFP-
년-PRJT
심리번호

HYUNDAI Rotem 현대로템주식회사

본 도면은 당사 재산으로써 허가없이 무단복사/배포 금지됨. PROPERTY OF ISSUING ENTITY. CANNOT BE DISTRIBUTED OR REPRODUCED WITHOUT AUTHORIZATION.

CATIA

치수 SPACE		A	B
	~ 40	2	4
	~ 30	2	3
	~ 10	1	1.5
최소	< 3	0.5	1
절삭 CUT	~ 3150	-	7
	~ 1600	4	5
	~ 800	3	4
	~ 400	2	3
	~ 200	1.5	2
	~ 100	1	1.5

등급 GRADE	주조 CASTING (±)	A	B
	~ 20M	8	14
	~ 15M	7	12
	~ 12M	6	10
	~ 8M	5	8
	~ 4M	4	6
	~ 2M	3	4
	~ 1M	2	3
	~ 315	1	2
	~ 120	1	2
	~ 30	1	1

등급 GRADE	용접 구조물 WELDING (±)	A	B	C
	~ 20M	-	6.0	8.0
	~ 15M	-	5.0	7.0
	~ 12M	-	4.0	6.0
	~ 8M	-	3.0	5.0
	~ 4M	0.8	2.0	4.0
	~ 2M	0.5	1.2	3.0
	~ 1M	0.3	0.8	2.0
A	~ 315	0.2	0.5	1.2
	~ 120	0.15	0.3	0.8
	~ 30	0.1	0.2	0.5
	3~6	0.05	0.1	0.2

등급 GRADE	기계 가공 MACHINING (±)	A	B	C
	구석R모떼기 일반공차 GENERAL TOLERANCE			